aalco®

ARCHITECTURAL
HANDRAIL
SYSTEMS

www. aalco-handrail.com

AALCO SYSTEMS

CUBE SYSTEM

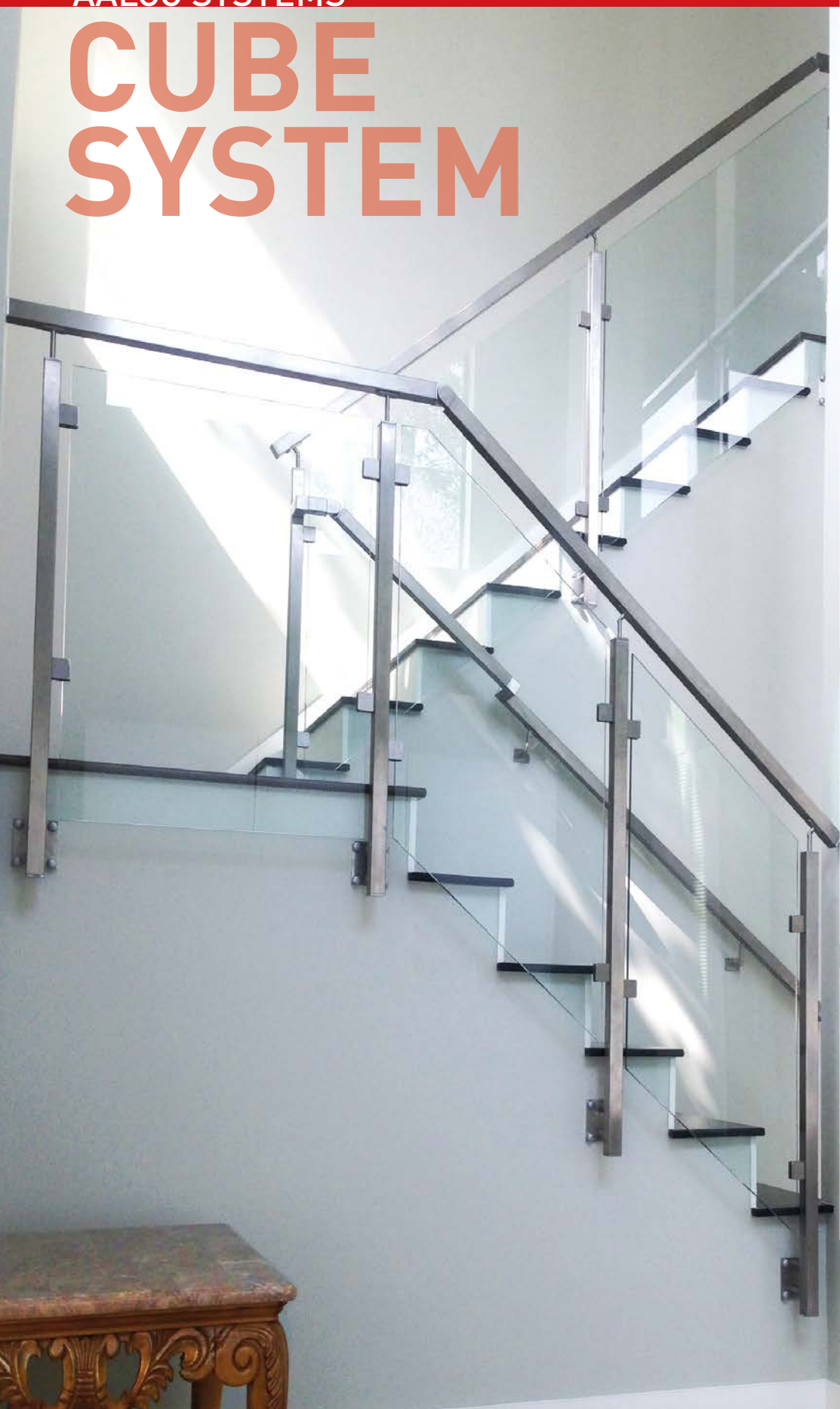

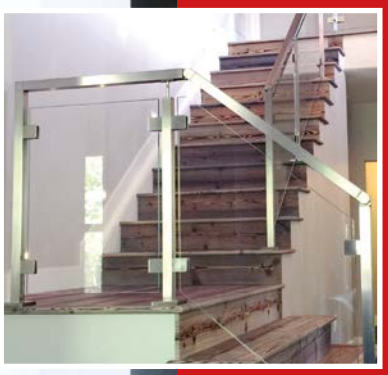

IAM DESIGN®

As the name suggests, this option provides an alternative to the more conventional rounded profiles, with a cube-shaped profile that sits very well with a contemporary architectural approach. Equally at home in internal and external applications, the linear and modern Cube system is quick and easy to install, requiring no welding or finishing on site.

- RUBBER MALLET TO BE USED
- PRODUCT TO BE GLUED WITH E4054
- ASSEMBLY WITH ALLEN KEY
- PRODUCT TO BE WELDED

SQUARE TUBES

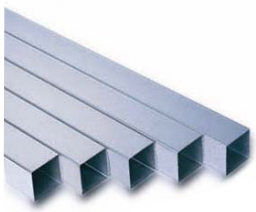

Stainless steel, satin finish, with grain size 240, individually packed

AISI304	AISI316	DIMENSIONS
E00203030	E10203030	30 x 30 x 2.0 x 3000mm
E06203030	E16203030	30 x 30 x 2.0 x 6000mm
E00204040	E10204040	40 x 40 x 2.0 x 3000mm
E06204040	E16204040	40 x 40 x 2.0 x 6000mm

ANCHORAGE ELEMENTS

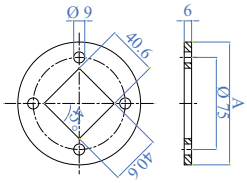

AISI304	AISI316	DIMENSION A	HOLE	HEIGHT
E02053	E02053316	Ø 100mm	40.6 x 40.6mm	6mm

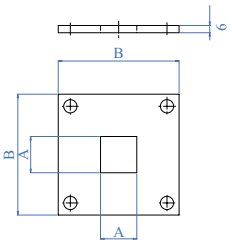

AISI304	AISI316	FOR TUBE A	DIMENSION B	EXTERNAL HOLES
E02050	E02050316	40 x 40mm	100 x 100mm	4 x Ø 11mm

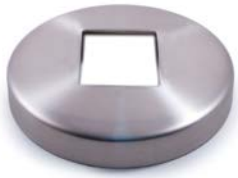

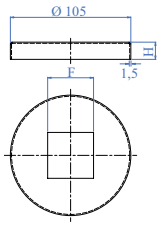

AISI304	AISI316	DIMENSION A	HOLE F	HEIGHT H
E02051	E02051316	Ø 105mm	41 x 41mm	15mm

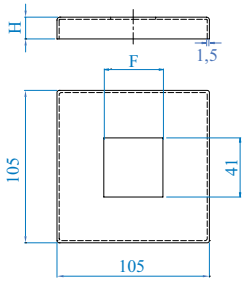

AISI304	AISI316	DIMENSION A	HOLE F	HEIGHT H
E02052	E02052316	105 x 105mm	41 x 41mm	15mm

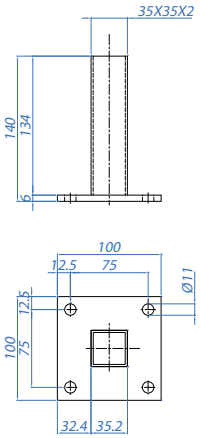

Anchor for tube, satin finish

AISI304	AISI316	FOR TUBE A
E4742/304	E4742	40 x 40 x 2.0mm

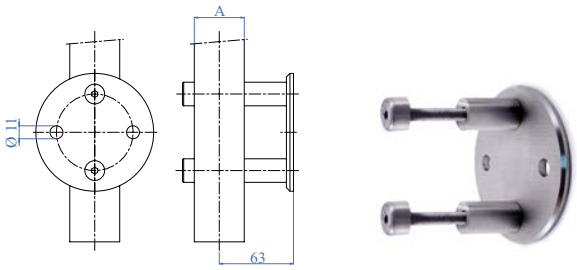

AISI304	AISI316	FOR TUBE A
E11440	E11440316	Flat face

LATERAL ANCHORAGES

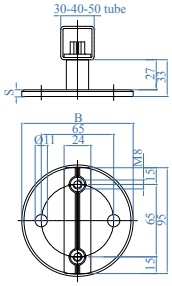

Complete with flange, spacers and tube plate

AISI304	AISI316	FOR TUBE A	DISC
E1110	E1110316	Flat face	Ø 100 x 6mm

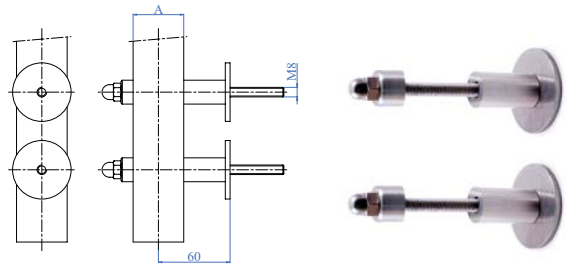

AISI304	AISI316	FOR TUBE A
E11340	E11340316	Flat face

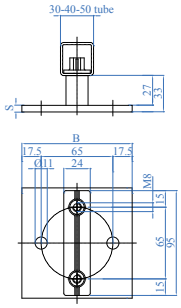

Complete with flange, spacers and tube plate

AISI304	AISI316	FOR TUBE A	B	S
E1120/304	E1120	40 x 40 x 2.0mm	100 x 100mm	6mm

FIXING RING

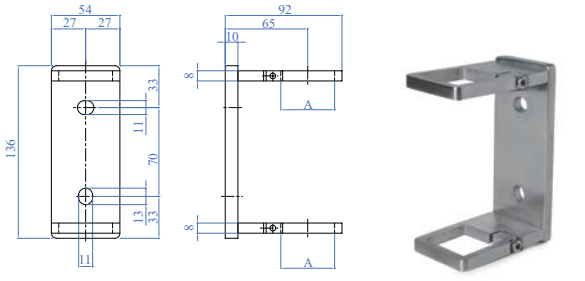

AISI316	FOR TUBE A
E116300	40 x 40mm

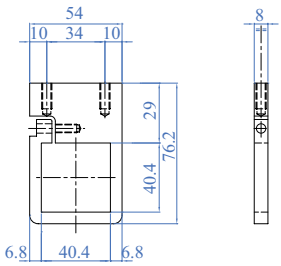

AISI316	FOR TUBE A
E117300	40 x 40mm

HANDRAIL SUPPORTS

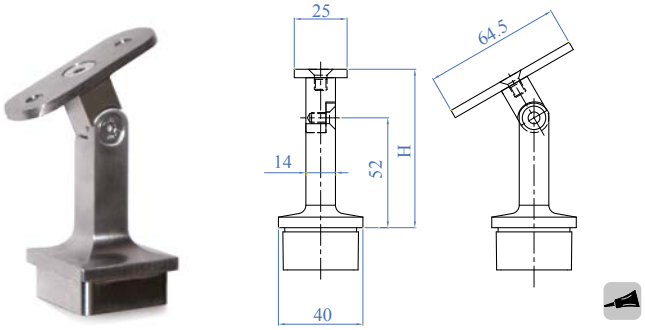

AISI304	AISI316	HEIGHT H	FOR HANDRAIL	FOR SQUARE TUBE A
E037700	E037710	75mm	Flat	40 x 40 x 2.0mm
E037800	E037810	75mm	Ø 33.7 - Ø 42.4mm	40 x 40 x 2.0mm

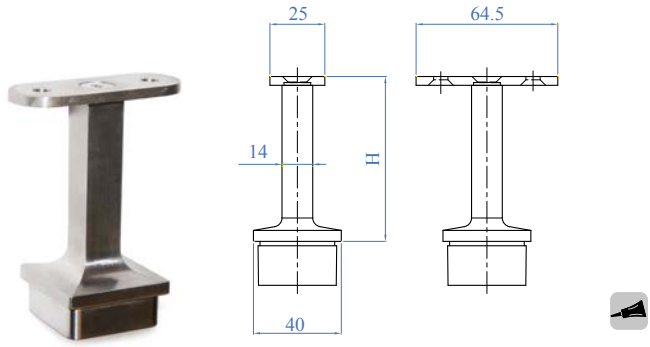

AISI304	AISI316	HEIGHT H	FOR HANDRAIL	FOR SQUARE TUBE A
E037300	E037310	75mm	Flat	40 x 40 x 2.0mm
E037400	E037410	75mm	Ø 33.7 - Ø 42.4mm	40 x 40 x 2.0mm

HANDRAIL SUPPORTS WITH ADJUSTABLE HEIGHTS

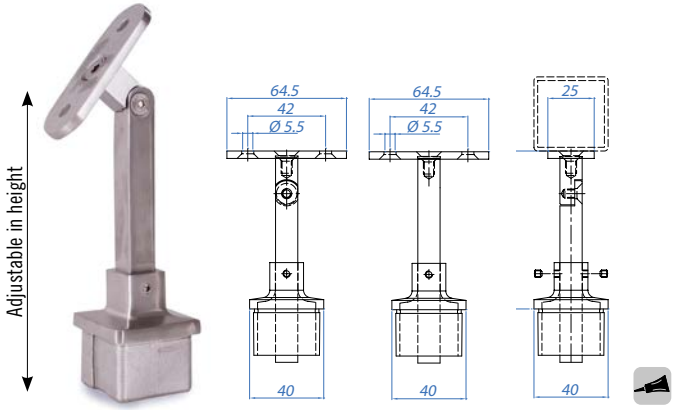

AISI316	PIVOTABLE	FOR HANDRAIL
E037900	No	40 x 40mm
E037920	Yes	40 x 40mm

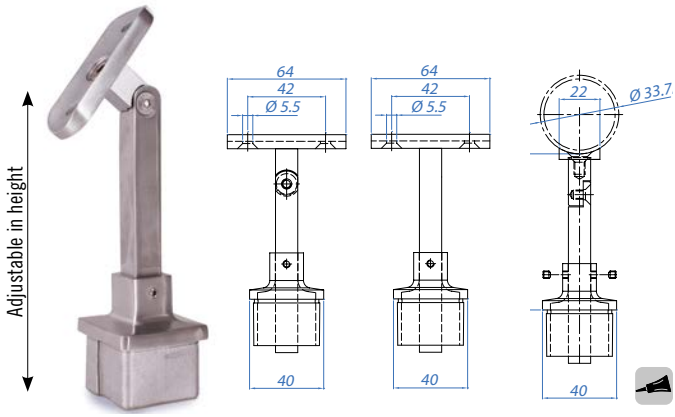

AISI316	PIVOTABLE	FOR HANDRAIL
E037910	No	Ø 33.7mm - Ø 42.4mm
E037930	Yes	Ø 33.7mm - Ø 42.4mm

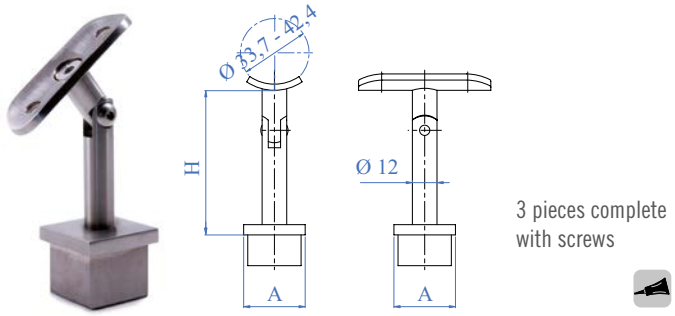

3 pieces complete with screws

AISI303	AISI316	HEIGHT H	FOR HANDRAIL	FOR SQUARE TUBE A
-	E037110	75mm	Ø 33.7mm	30 x 30 x 2.0mm
E037200	E037210	75mm	Ø 42.4mm	40 x 40 x 2.0mm

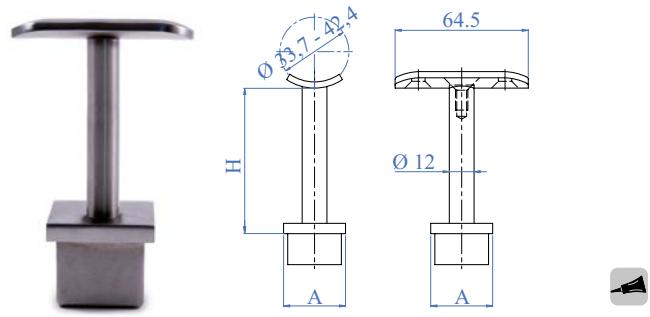

AISI303	AISI316	HEIGHT H	FOR HANDRAIL	FOR SQUARE TUBE A
E037600	E037610	75mm	Ø 42.4mm	40 x 40 x 2.0mm

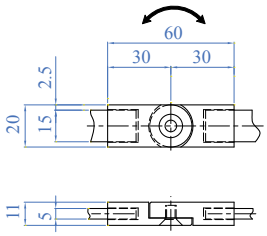

AISI304	AISI316	HOLE A
E036100	-	15 x 5mm 19/32" X 13/64"

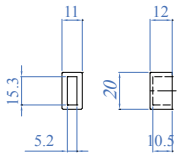

AISI304	AISI316	HOLE A
E036200	-	15 x 5mm

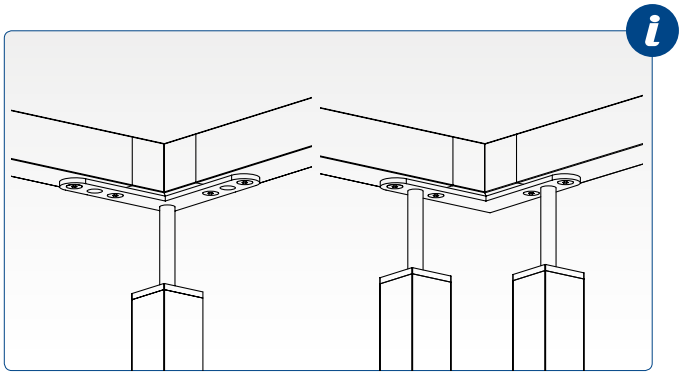

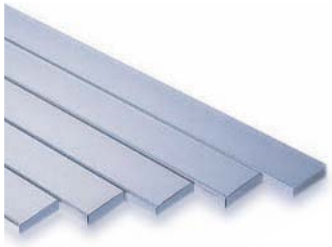

AISI304	AISI316	DIMENSIONS	WEIGHT
EP15X5	EP15X5316	15 x 5 x 4000mm	2.36 kg

MOUNTING PLATES

Thickness 4mm

AISI304	AISI316	FOR TUBE
E011976	E011976316	Flat face

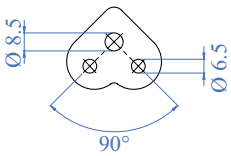

Thickness 4mm

AISI304	AISI316	FOR TUBE
E011970	E011970316	Flat face

MOUNTING PLATES 90°

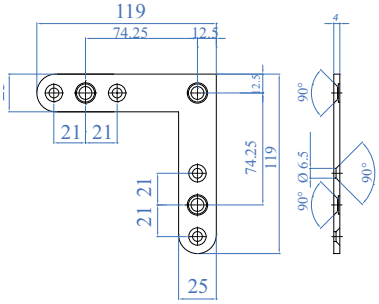

Thickness 4mm

AISI304	AISI316	FOR TUBE
E011977	E011977316	Flat face

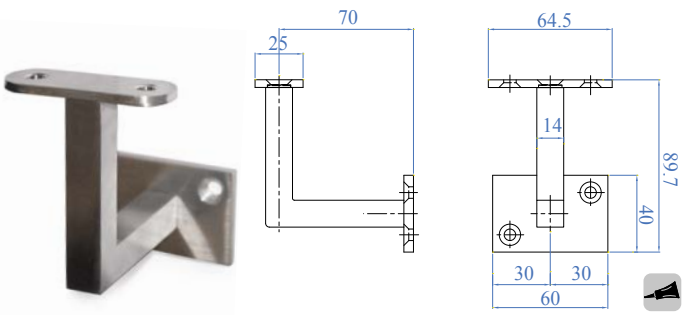

AISI304	AISI316	FOR HANDRAIL
E036300	E036310	Flat
E036400	E036410	Ø 33.7 - Ø 42.4mm

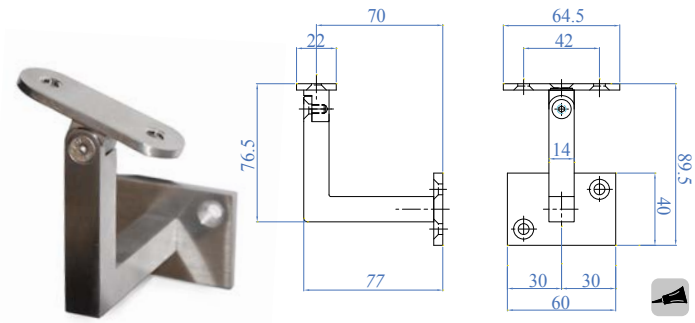

AISI304	AISI316	FOR HANDRAIL
E036500	E036510	Flat
E036600	E036610	Ø 33.7 - Ø 42.4mm

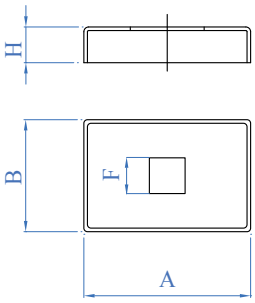

AISI304	AISI316	DIMENSIONS A x B	HOLE F	HEIGHT H
E036700	E036710	70 x 47mm	15mm	15mm

Quick to install, it does not need welding or finishing on site

Countersunk holes and the 14 x 14 mm section make the hole extremely resistent, strong and steady

Linear and modern design, in line with contemporary architectural trends

Also available with the new flange cover

FITTINGS

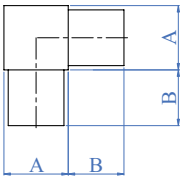

90° elbows for square tube, satin finish

AISI304	AISI316	FOR TUBE A	B
–	E4710	20 x 20 x 1.5mm	20mm
–	E4711	25 x 25 x 2.0mm	20mm
–	E4712	30 x 30 x 2.0mm	25mm
E4713/304	E4713	40 x 40 x 2.0mm	25mm

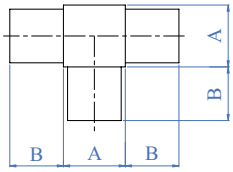

"T" connector, for square tube, satin finish

AISI304	AISI316	FOR TUBE A	B
–	E4730	20 x 20 x 1.5mm	20mm
–	E4732	30 x 30 x 2.0mm	25mm
E4733/304	E4733	40 x 40 x 2.0mm	25mm

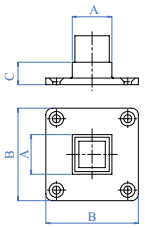

Anchor for handrail

AISI316	FOR TUBE A	B	C
E4700	30 x 30 x 2.0mm	70mm	22mm
E4701	40 x 40 x 2.0mm	80mm	18mm
E4702	50 x 50 x 2.0mm	95mm	18mm
E4703	60 x 60 x 2.0mm	105mm	18mm

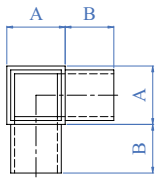

3-way corner, for square tube, satin finish

AISI304	AISI316	FOR TUBE A	B
–	E4720	20 x 20 x 1.5mm	20mm
–	E4722	30 x 30 x 2.0mm	25mm
E4723/304	E4723	40 x 40 x 2.0mm	25mm

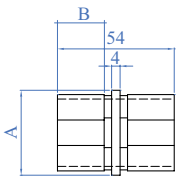

Straight connector for square tube

AISI316	FOR TUBE A
E4760	40 x 40 x 2.0mm

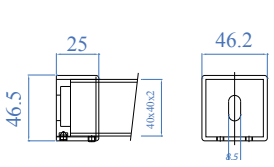

Anchor for tube, satin finish

AISI316	FOR TUBE A
E4740	40 x 40mm

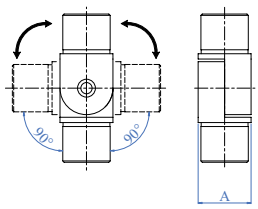

Pivotable connector for square tube, satin finish

AISI316	FOR TUBE A
E4743	40 x 40 x 2.0mm

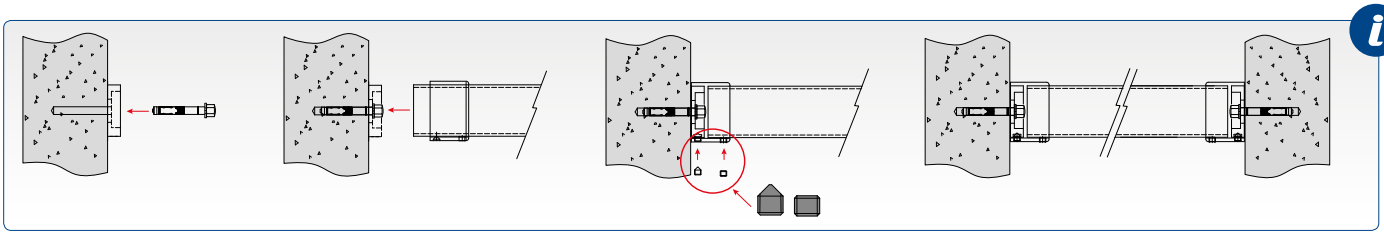

END CAPS FOR SQUARE TUBE

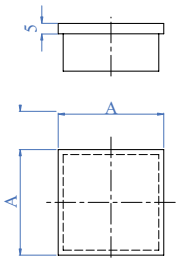

For square tube, satin finish

AISI304	AISI316	FOR TUBE A x A
–	E4200	20 x 20 x 1.5mm
–	E4210	25 x 25 x 2.0mm
–	E4220	30 x 30 x 2.0mm
E4230/304	E4230	40 x 40 x 2.0mm
–	E4240	50 x 50 x 2.0mm
–	E4250	60 x 60 x 2.0mm

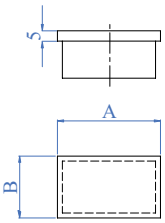

For rectangular tube, satin finish

AISI316	FOR TUBE A x B
E4251	30 x 20 x 2.0mm
E4252	40 x 20 x 2.0mm
E4253	40 x 30 x 2.0mm
E4254	50 x 30 x 2.0mm
E4255	60 x 40 x 2.0mm

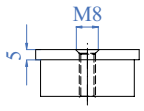

For square tube, satin finish, with threaded hole

AISI304	AISI316	FOR TUBE A x A
–	E42201	30 x 30 x 2.0mm
E42301/304	E42301	40 x 40 x 2.0mm

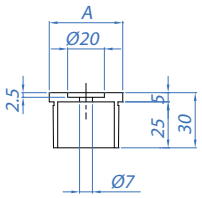

Square shallow end cap

AISI304	AISI316	FOR TUBE A	H
E42302/304	E42302	40 x 40 x 2.0mm	5mm

aalco®

ARCHITECTURAL HANDRAIL SYSTEMS

www.aalco-handrail.com

Aalco has 18 service centres around the country which offer a reliable and on-time delivery service anywhere in the UK. Each centre holds stock to meet the immediate needs of customers in the local area and this is backed up by bulk stocks held at a central warehouse.

To find out more, ask for a quotation or to get advice on any product selection, please contact your local Aalco service centre.

ABERDEEN
Tel: 01224 854810
Fax: 01224 871982
aberdeen@aalco.co.uk

AYLESBURY
Tel: 01296 461700
Fax: 01296 339923
aylesbury@aalco.co.uk

BELFAST
Tel: 028 9083 8838
Fax: 028 9083 7837
belfast@aalco.co.uk

BIRMINGHAM
Tel: 0121 585 3600
Fax: 0121 585 6864
birmingham@aalco.co.uk

CHEPSTOW
Tel: 01291 638638
Fax: 01291 638600
chepstow@aalco.co.uk

DYFED
Tel: 01269 842044
Fax: 01269 845276
dyfed@aalco.co.uk

ESSEX
Tel: 01268 884200
Fax: 01268 884220
essex@aalco.co.uk

GLASGOW
Tel: 0141 646 3200
Fax: 0141 646 3260
glasgow@aalco.co.uk

HULL
Tel: 01482 626262
Fax: 01482 626263
hull@aalco.co.uk

LEEDS
Tel: 0113 276 3300
Fax: 0113 276 0382
leeds@aalco.co.uk

LIVERPOOL
Tel: 0151 207 3551
Fax: 0151 207 2657
liverpool@aalco.co.uk

MANCHESTER
Tel: 01204 863456
Fax: 01204 863430
manchester@aalco.co.uk

NEWCASTLE
Tel: 0191 491 1133
Fax: 0191 491 1177
newcastle@aalco.co.uk

NORWICH
Tel: 01603 787878
Fax: 01603 789999
norwich@aalco.co.uk

NOTTINGHAM
Tel: 0115 988 2600
Fax: 0115 988 2636
nottingham@aalco.co.uk

SOUTHAMPTON
Tel: 023 8087 5200
Fax: 023 8087 5275
southampton@aalco.co.uk

STOKE
Tel: 01782 375700
Fax: 01782 375701
stoke@aalco.co.uk

SWANLEY
Tel: 01322 610900
Fax: 01322 610910
swanley@aalco.co.uk

AMARI

Also available in Ireland

DUBLIN
Tel: +353 (0) 1 629 8600
Fax: +353 (0) 1 629 9200
dublin@amari-dublin.com

CORK
Tel: +353 (0) 21 431 0520
Fax: +353 (0) 21 431 0519
cork@amari-cork.com